A new era in molecular nanoscience.
Ultra-high vacuum compatible electrospray deposition.

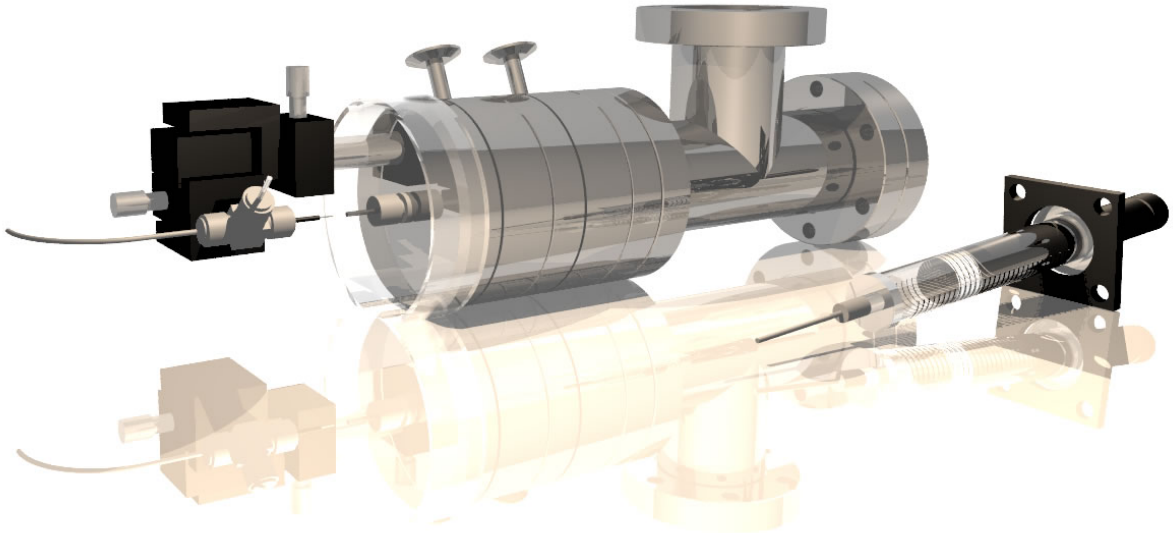

UHV^4 ELECTROSPRAY DEPOSITION SYSTEM | Designed to be portable, modular and adaptable, the MolecularSpray UHV^4 system is capable of depositing large, fragile non-volatile molecules onto surfaces at pressures as low as 10^{-8} mbar. A solution of the molecule you want to deposit is fed from the liquid delivery syringe to a compact electrospray head mounted on a miniature 3-axis manipulator. The liquid is then drawn through a narrow emitter capillary where the applied high voltage produces a plume of tiny charged droplets. These droplets undergo successive coulomb fission events and solvent evaporation as the plume is channelled through a narrow entrance capillary and a series of differentially pumped molecular beam skimmers, producing a low energy beam of desolvated molecules. Coupled to almost any UHV chamber via a CF70 UHV gate-valve, the system can deliver deposition rates from fractions of a monolayer per minute to more than a monolayer a minute, at pressures between 10^{-8} mbar and 10^{-6} mbar. With applications ranging from the deposition of organometallic dyes on single crystal titanium dioxide surfaces at synchrotron facilities, to the deposition of fullerenes into the pores of supramolecular surface networks for scanning tunnelling microscopy studies, the UHV^4 makes it possible to bridge the gap between high resolution surface science techniques and a vast library of non-volatile molecules.

MOLECULARSPRAY
129 Hawton Crescent, Nottingham NG8 1ED, UK
web: molecularspray.co.uk | email: sales@molecularspray.co.uk | VAT number: GB 933 6283 15

MolecularSpray
ELECTROSPRAY DEPOSITION SYSTEMS

UHV Electrospray Deposition

Whether it's dye molecules on oxide surfaces at the synchrotron or fullerene derivatives on gold in your STM, we have the solution.

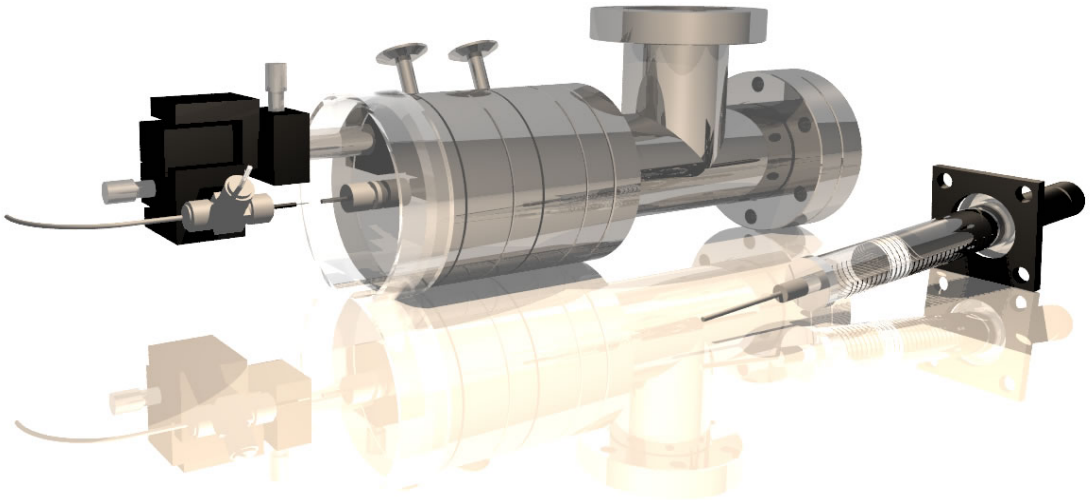

THECHNICAL DETAILS

Dimensions
33 x 10 x 10 cm

Base pressures
Stage 1: 8 x 10^{-1} mbar
Stage 2: 6 x 10^{-2} mbar
Stage 3: 1 x 10^{-5} mbar
Stage 4: 8 x 10^{-9} mbar typical

Deposition pressure
Stage 4: 10^{-8} to 10^{-6} mbar

Working distance
up to 50 cm from final aperture

Emitter voltage
1.5 kV to 3.5 kV typical

Pumping requirements
Stage 1, 2: Rough >100 $lmin^{-1}$
Stage 3: Turbo >70 ls^{-1}

Deposition rate
<1 $MLmin^{-1}$

Mounting flange
CF70 (2.75"). Can be mounted in any orientation (preferably via gate valve).

The basic UHV^4 kit comprises a modular four-element differentially pumped aperture assembly (incorporating a range of desolvation entrance capillaries, two electroformed precision molecular beam skimmers, and interchangeable exit aperture), compact electrospray head with 3-axis tip positioning, liquid delivery system, 5 re-useable stainless steel electrospray emitters, an air-side high voltage connector, and optical alignment source all housed in a virtually indestructible flight case. All you need to add is the pumping (see left) and the high voltage power supply (variable up to +4 kV ideally).

MOLECULARSPRAY
129 Hawton Crescent, Nottingham NG8 1ED, UK
web: molecularspray.co.uk | email: sales@molecularspray.co.uk | VAT number: GB 933 6283 15

MolecularSpray
ELECTROSPRAY DEPOSITION SYSTEMS